APEX-3 Sample Line Transmission Efficiency

Bruce Anderson and Edward Winstead

April, 2006

Lab Test Setup: Aerosol Generation and Measurement

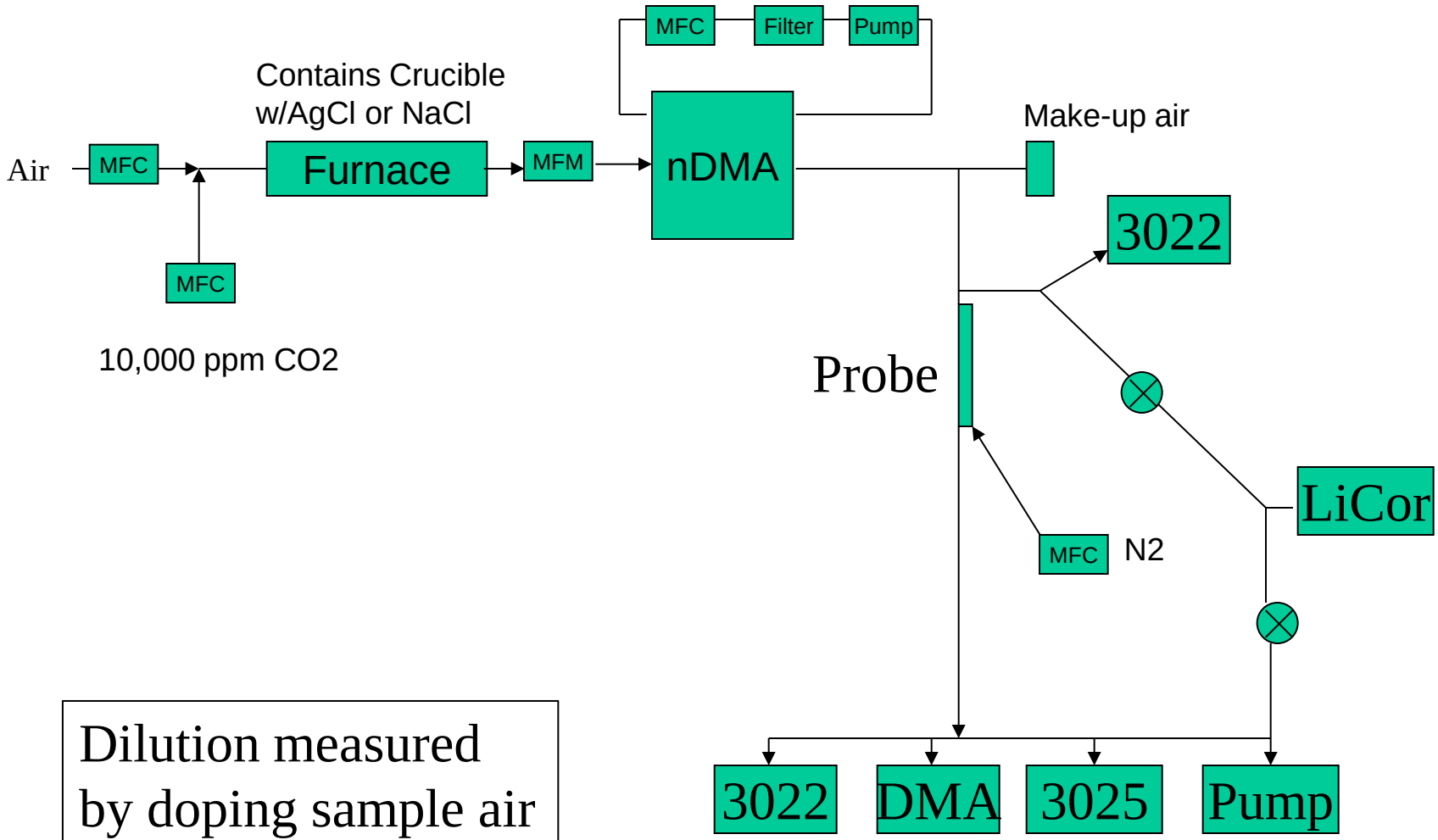

Dilution measured by doping sample air with high CO2

APEX-3 Aerosol Probe

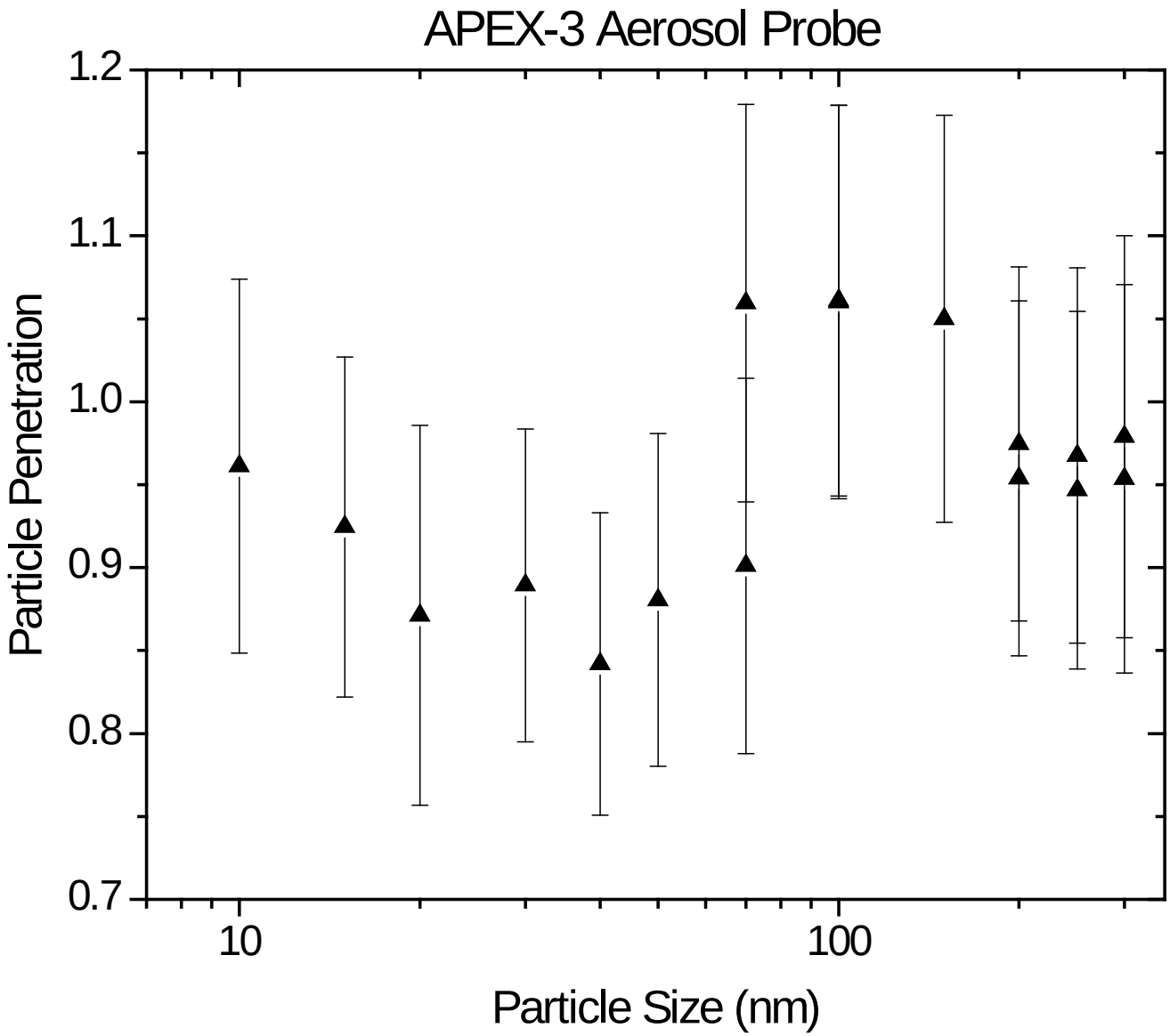

APEX-3, 1 m Aerosol Sampling Line

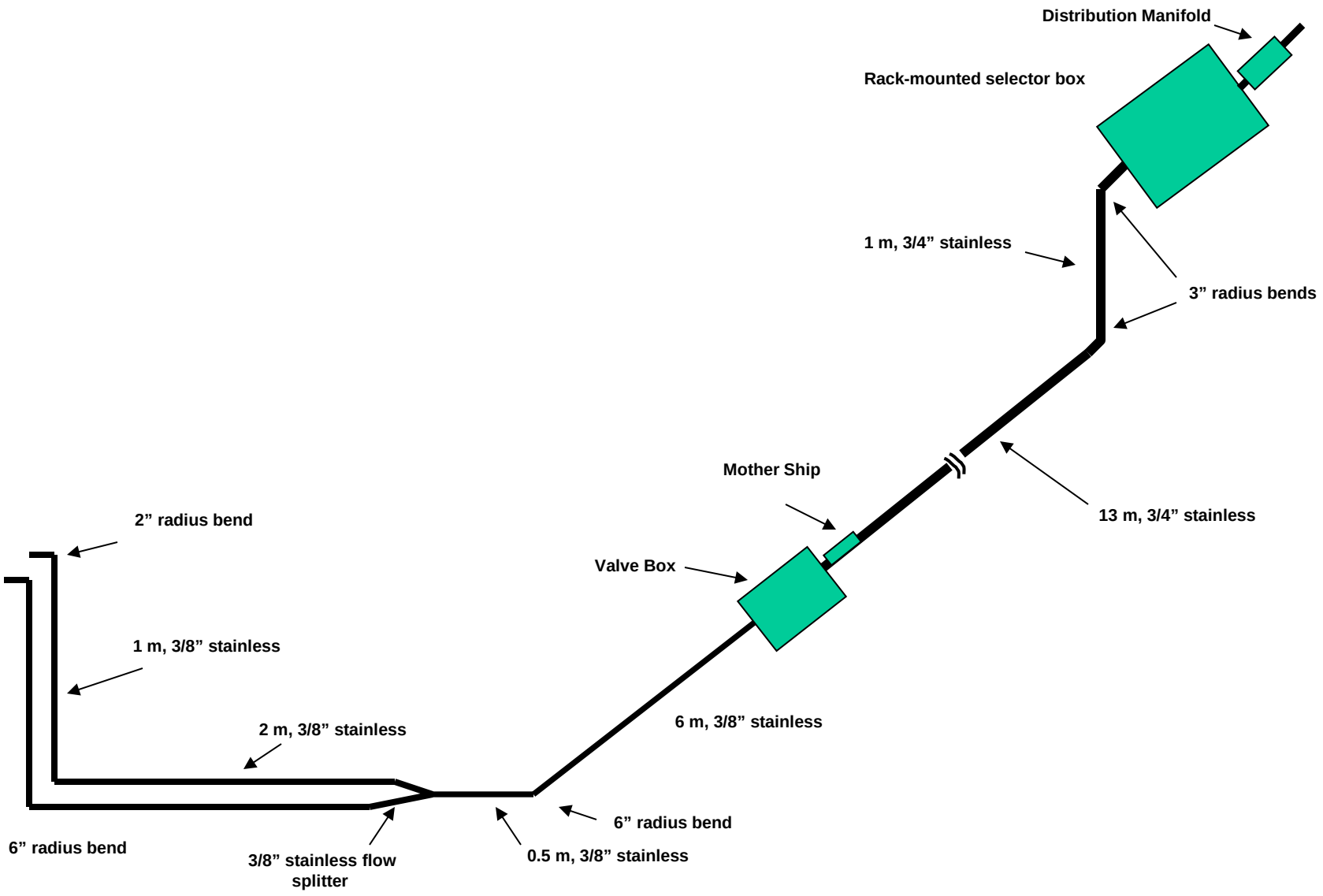

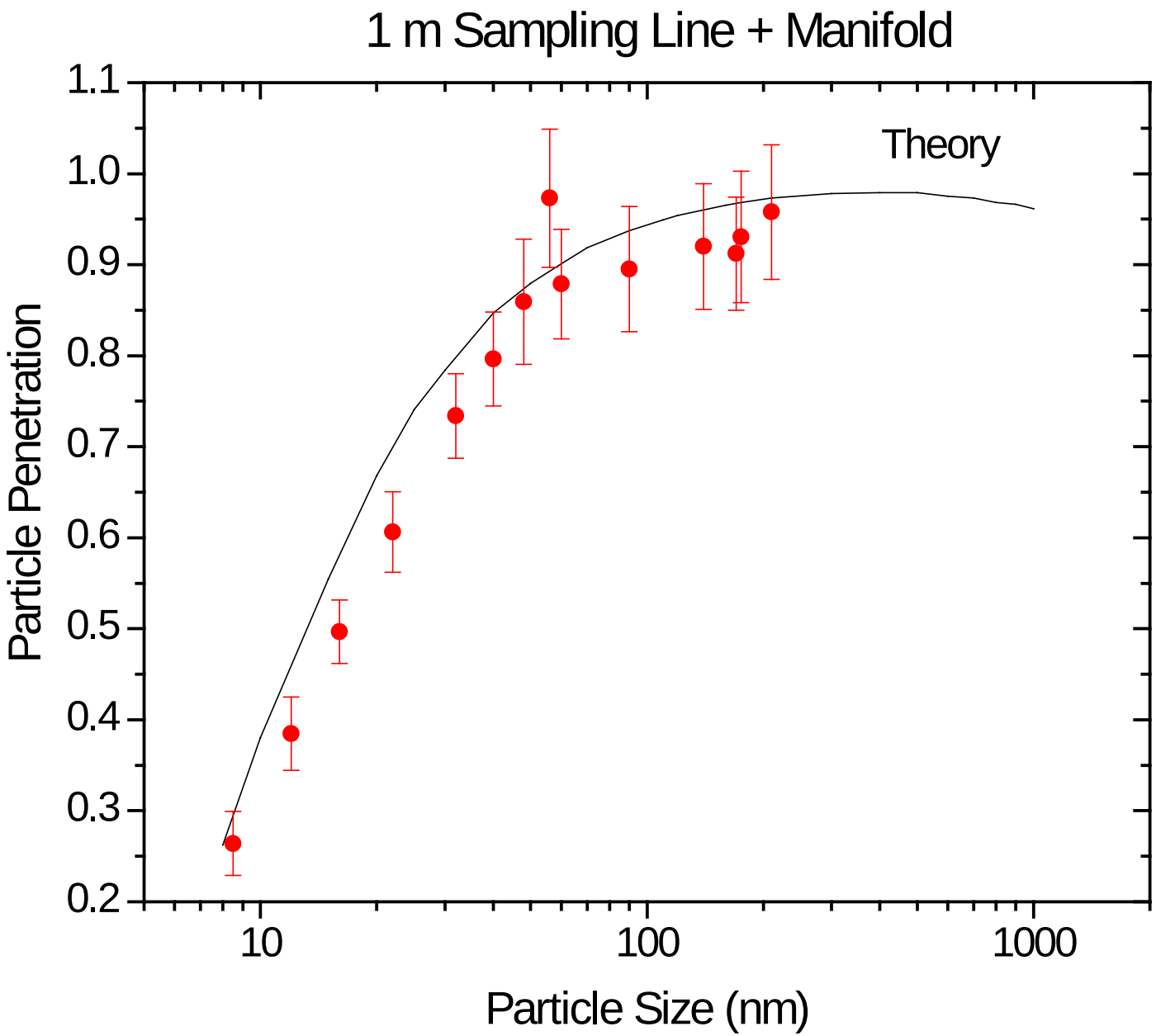
1 m Sampling Line + Manifold
Theory
Particle Penetration
Particle Size (nm)
1.1
1.0
0.9
0.8
0.7
0.6
0.5
0.4
0.3
0.2
10
100
1000

APEX-3, 30 m Aerosol Sampling Line

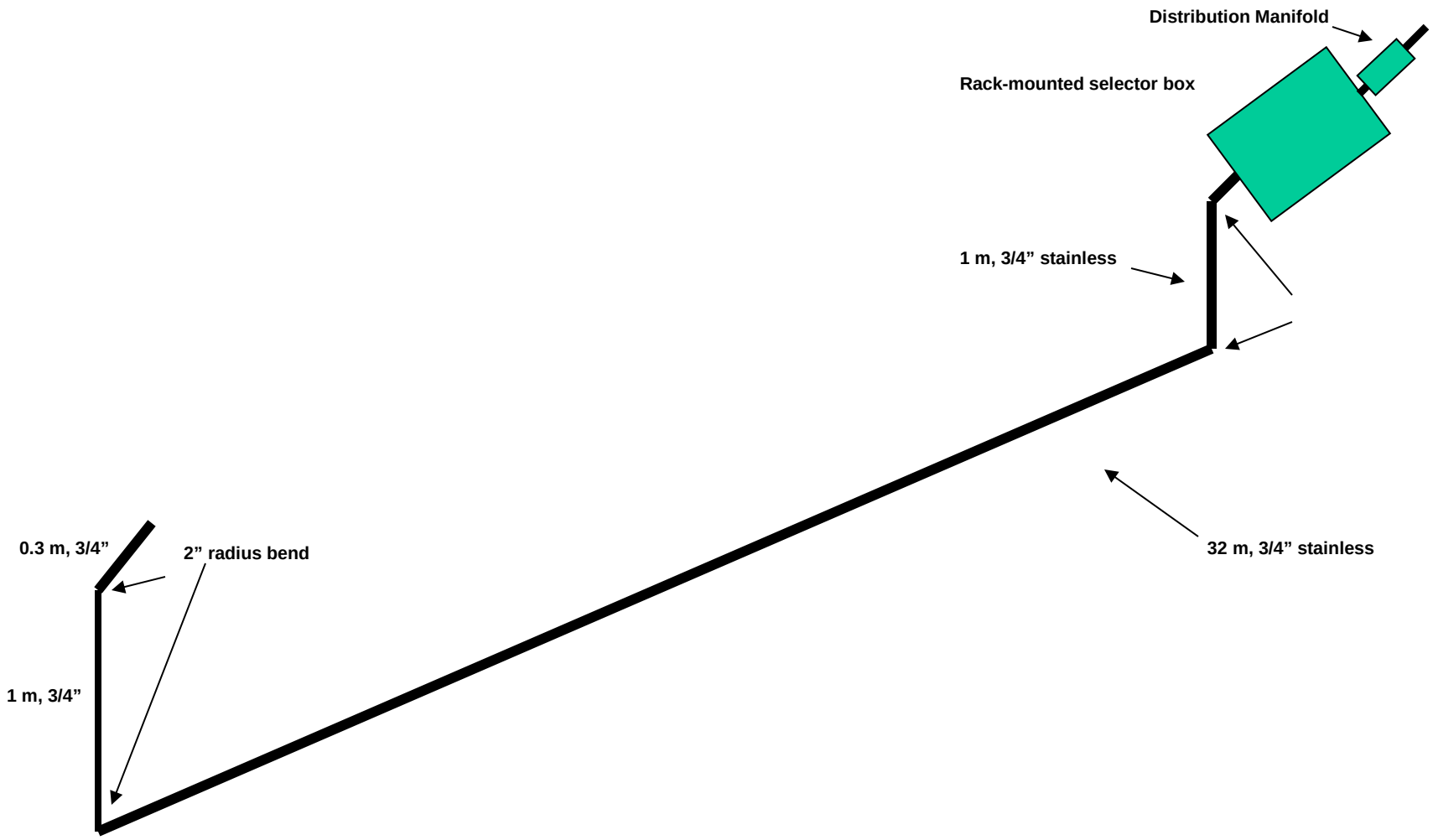

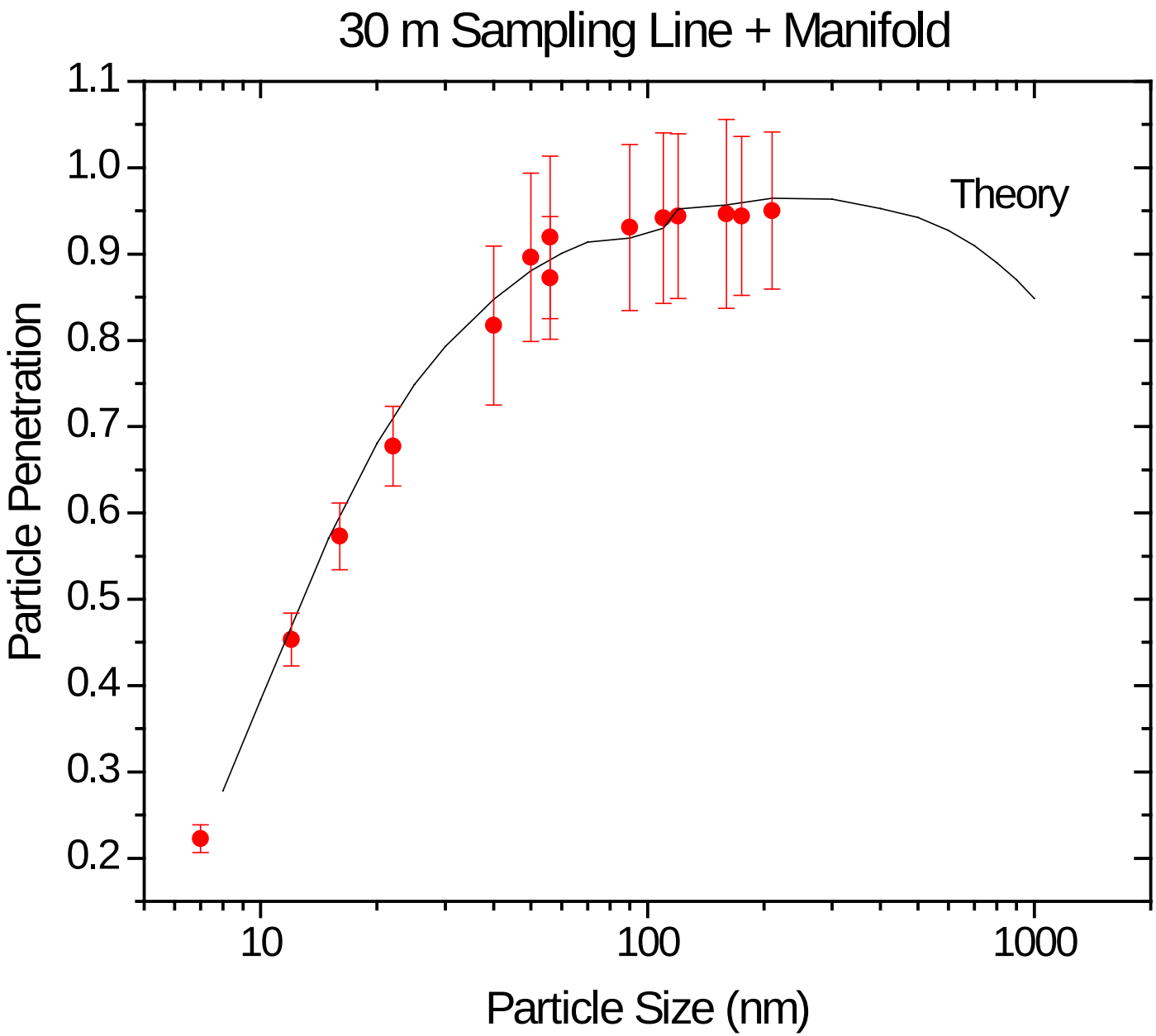
30 m Sampling Line + Manifold
Theory
Particle Penetration
Particle Size (nm)
1.1
1.0
0.9
0.8
0.7
0.6
0.5
0.4
0.3
0.2
10
100
1000

Summary

- An laboratory test system was developed for assessing particle transmission efficiency though dilution probes and sample lines
- Correcting for dilution, particle losses through AEDC probes minimal at room temperature and pressure
- Losses within sample lines increase with decreasing particle size as predicted by empirical models
- Measured losses slightly greater than predicted, could be related to surface roughness within transport tubes